Connection:

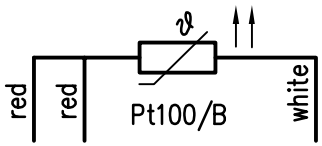

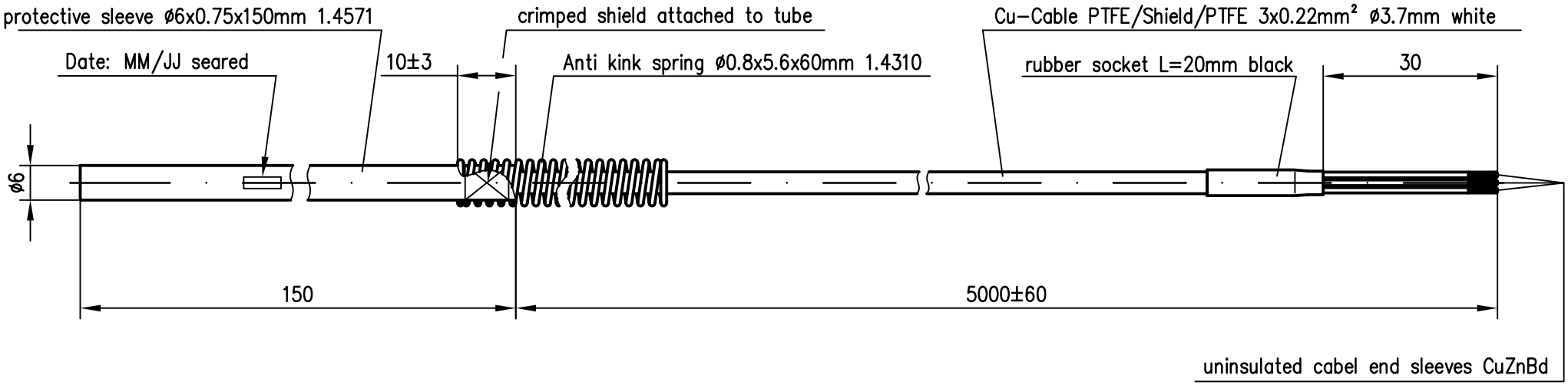

waterproof connection: IP67

Tripel laed connection:
Measuring range-50...+260°C

"Please note the protecting process according to DIN ISO 16016"

Usage	Zul.Abw.	Surface	Scale 1:1
			Material

	Date	Name
Drawer	20.08.13	Groß
Check		
Norm		

Zust	Change	Date	Name

Description

Kabelfühler
1xPt100/B/3

Article no.: 0625 0128-41K

Page	Index
1	
1	BI